Bread slicers for professionals

ECO+

- Automatic control system of pressure and slicing speed thru ISC ® system : no manual setting needed
- “M” system Micronised knife lubrication system
- Automatic control system of the cutting action AutoMode (start and finish) : no buttons or cover (optional)
- Easy to use for all
- Removable, ergonomic crumb collector
- Silent

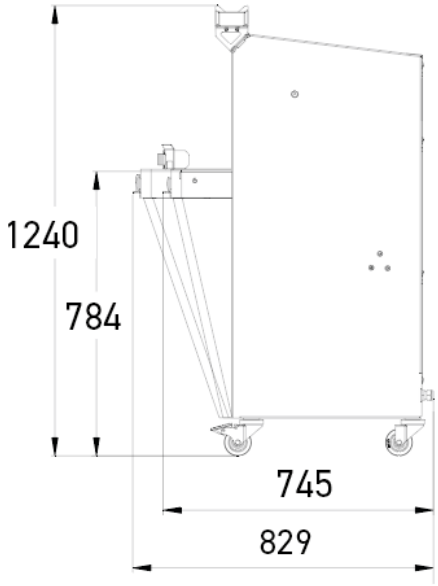
1240
784
745
829

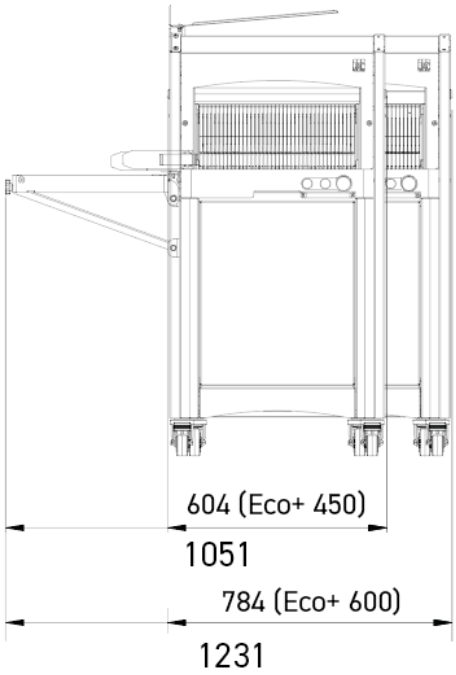
604 (Eco+ 450)
1051
784 (Eco+ 600)
1231

SPECIFICATIONS

Max. loaf dimensions in cm (L x W x H)	44 x 30 x 16
Motor power in kW	1.1
Net weight (in kg)	175
Blade type and dimensions in mm	13 x 0.5 Teflon coated
ISC extended mode selector	•
Daily adding counter	•
Heavy duty motor	•

Finition

TECHNICAL SPECIFICATIONS

Slice thickness in mm	9,10,11,12
Loaf pusher height	Misch (80mm)
Power supply	400V three-phase +N

Options (Additional cost)	Foldable bag blower, Automode, 4 cm height adjustment, Bag holder

MAIN STRENGTHS

ISC® extended mode selector

Intelligent Slicing Control (JAC patent) is an automatic pressure and slicing speed control system. It adapts the cutting action according to the consistency of the bread. No manual setting needed. The ISC® with extended mode selector provides two extra automatic modes, to adapt to extreme cutting condition of very fresh breads or the need for particularly fast cutting rate.

Removable crumb collector

Accessible by tilting the front, cylinder-assisted door. 18 litre capacity.

Jacflaps

Holds the loaf together for easier handling when unloading.

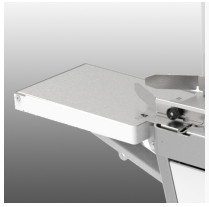

Foldable bag blower (option)

Saves packaging time.

«M» System

Micronised knife lubrication system for cutting bread with a high rye content or sticky crumb. Developed by JAC, it consumes the least possible amount of oil (120 ml per 1000 loaves) and delivers consistent cutting quality. The Misch system (a JAC patent) was invented by JAC in order to overcome hygiene and reliability problems brought about by other knife lubrication systems.

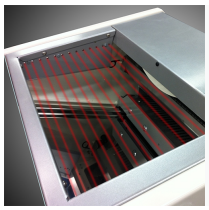

Automode (option)

Automatic cutting cycle for optimum time management (JAC patent). Increased accessibility while maintaining an optimum safety level. Achieves maximum output combined with fewer operations.