DIV

- Increased productivity
- Simplified cleaning
- Silent (-65dB)
- Stainless steel exterior
- 20 divisions
- 5 years parts / 1 year labor warranty

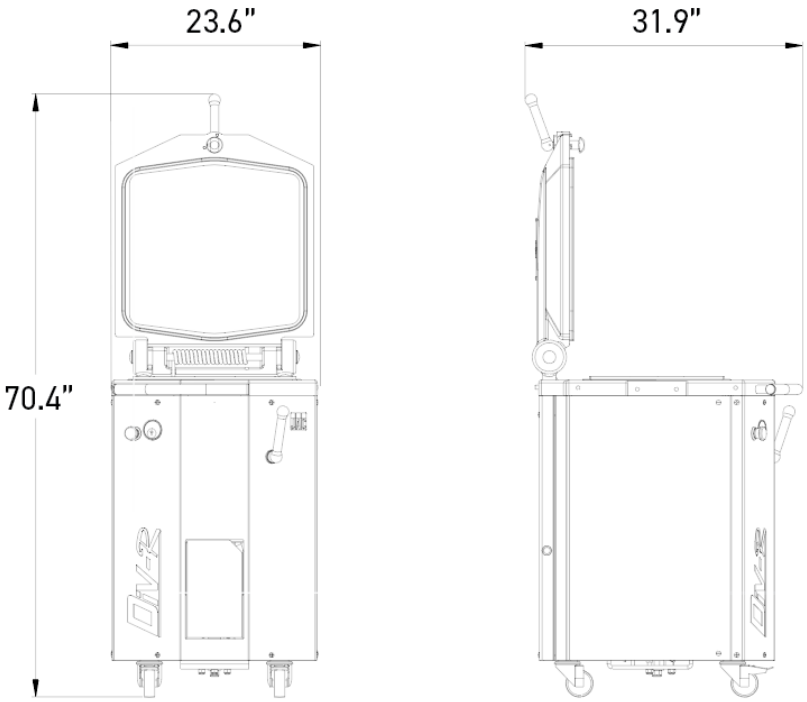
23.6"
31.9"
70.4"

SPECIFICATIONS

Dimensions of round tanks (L x W x H) in in	18.11”x 4.72”
Max/min weight of dough pieces in oz (dough dependent)	3.5 / 31,7
Chamber capacity in lbs	39,7
Automatic knife retraction	•
Motor power in kW	1.8
Type of motor	3ph/208V/60Hz/11A
Net weight in lbs	573
Easy Clean treatment	•

Options (Additional cost)	Protection handle

MAIN STRENGTHS

ETL Listed US & Canada

If the ETL Listed mark has a "US" to the bottom right, it has passed U.S. product safety standards. If it has a "C" to the bottom left, it has passed Canadian product safety standards. If the ETL mark displays both identifiers, it meets both standards.

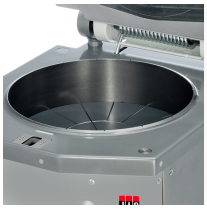

Stainless-steel bodywork, tank and knives

Includes automatic blade retraction for easy maintenance.

Plug Configuration

NEMA L15-20P

Partners

JAC is a member of these different associations