TRADILEVAIN

- Starter uniformity and stability
- Simple usage and easy cleaning
- Stainless steel structure and exterior
- Exclusive mixing system

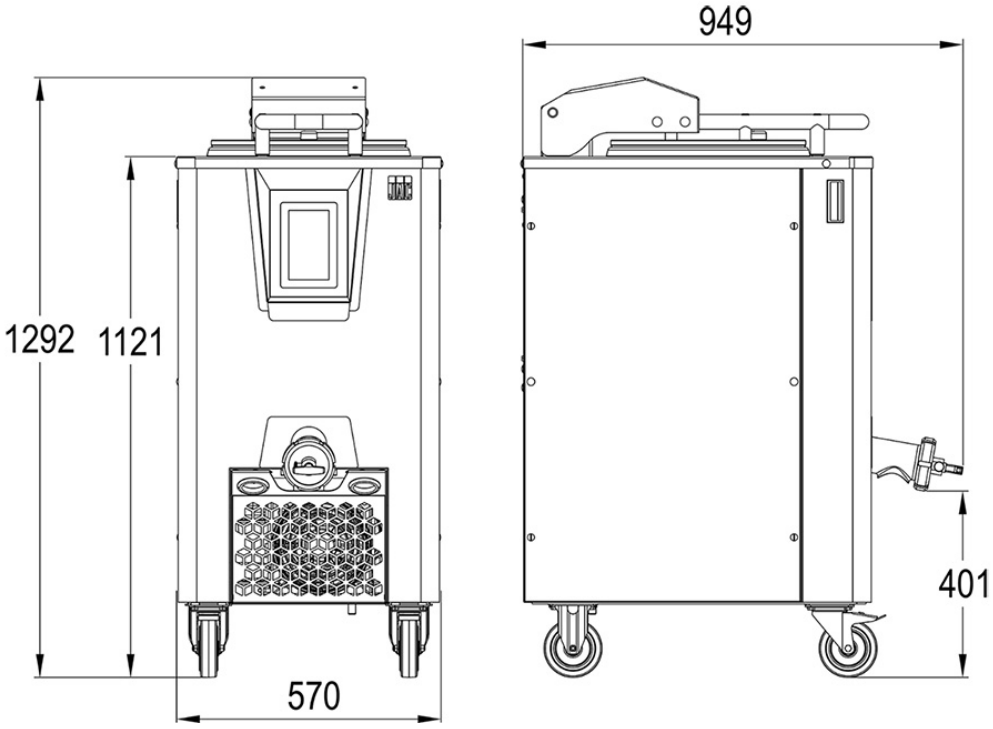

SPECIFICATIONS

Automix	•
Variospeed	•
Thermasoft	•
Minicare	•
Touch screen	•
Motor power (kW)	1,5
Heating power in (kW)	0,27
50Hz chiller power (kW)	0,4
220v - 60Hz (A)	6,5
Loading height (inch)	44''
Tank volume (gal)	21
Maximum total capacity (gal)	13,2
Maximum useful capacity (gal)	10,5
Minimum total capacity (gal)	6,6
Minimum useful capacity (gal)	5,2

TECHNICAL SPECIFICATIONS

Power supply	230V three-phase ,400V three-phase
Fréquence d'alimentation	50 HZ,60 HZ (supplément)

MAIN STRENGTHS

Automix (Brevet JAC)

This automatic agitation management system based on fermentation activities makes Tradilevain smarter. It triggers its agitation cycles only when necessary by analyzing the level of fermentation. Less agitation, the leaven is of better quality. No more complicated cycle programming.

Variospeed (Patent JAC)

The Tradilevain will adjust the stirring speed according to the volume of sourdough present in order to stir it without damaging it.

Minicare (Patent JAC)

In addition to being equipped with an anti-overflow system, the Tradilevain is equipped with a low level warning system that can be configured according to your production: the Minicare. This way you can be sure that you always have a minimum of intact mother leaven at the bottom of the tank.

Thermasoft (Innovation JAC)

JAC has developed a gentle heat system that allows the temperature to be maintained during long fermentation cycles or to adjust an imprecise water temperature by a few degrees during cooling.

système de pesage (option)

JAC has developed a gentle heat system that allows the temperature to be maintained during long fermentation cycles or to adjust an imprecise water temperature by a few degrees during cooling.

Completely made of stainless steel

An all stainless steel machine for ease of cleaning and without deterioration over time.

Touchscreen

A large touch screen (7 inches), very intuitive, set back from the bodywork and in an oblique position for perfectly ergonomic use. 2 factory recipes and 6 customizable recipes. A built-in calculator to help you keep track of the amount of leaven left in the tank.

Aerobic valve

Allows an oxygen supply when necessary.

Tank tower

The monobloc stainless steel tank tower is perfectly sealed and hygienic. Its rim prevents impurities from falling into the tank.

Tank seal

The airtight tank seal is placed around the lid. It can be dismantled in a few seconds for easy cleaning.

Mixing system by submerged blades

A mixing system by submerged blades that requires little maintenance and avoids the drift of the sourdough (the sourdough which dries on the mixing arms of standard sourdough machines ends up developing bacteria which fall into the tank and destabilize the bacteriological balance) . The profile of the mixing blades has been reworked to offer a 75% more powerful mixing.

An outlet valve with self-scouring system

Easy to dismantle for quick cleaning.

Handles

Recessed handles are integrated into the stainless steel side walls for easy movement of the machine.n

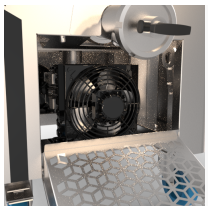

Cold group

The cold group makes it possible to control the temperature of the leaven during the various production cycles.

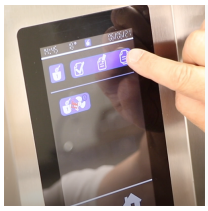

Recipes

2 recipes stored in the factory and 6 customizable recipes, 3 in the classic cycle and 3 in the Automix cycle.

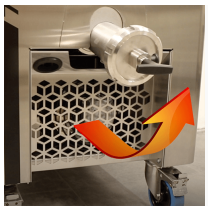

Hot air vent

A hot air vent from the cooling unit on the front to optimize the cooling performance of the machine and facilitate cleaning (without tools) of the cooler.

Locking casters

Large locking casters to facilitate movement and ensure good stability.

Powerful, fast and homogeneous mixing

Thanks to the new profiles of the propeller and the tank, the mixing of a complete tank - no matter the size of your Tradilevain - is done in 1 minute and 30 seconds. A significant time saver when most fermenters can take up to 20 minutes. During a refresh, you can worry-free load your flour in one go. The propeller will have no trouble making the mixture homogeneous.

Plug Configuration

NEMA L15-20P

Partners

JAC is a member of these different associations